Rosedale

27 BROOKLANDS WAY, BOURNE, PE10 9GW

£190,000

"Modern mid-terraced property with parking and single garage"

- MODERN MID-TERRACED PROPERTY
- GARAGE AND PARKING
- THREE BEDROOMS AND ENSUITE
- POPULAR LOCATION
- KITCHEN-DINER
- ENCLOSED REAR GARDEN
- CLOSE TO LOCAL AMENITIES
- NO ONWARD CHAIN
- IDEAL FIRST-TIME BUYERS HOME
- EPC ENERGY RATING B - COUNCIL TAX BAND B

PROPERTY HIGHLIGHTS

This modern house on Brooklands Way is ideal for a first-time buyer, landlord or as a family home and offers a perfect blend of comfort and convenience. It features a lounge, kitchen-diner, cloakroom, three bedrooms, an ensuite and bathroom. The two bathrooms provide ample facilities, ensuring that morning routines run smoothly for everyone. The property also features an enclosed rear garden and there is a single garage which can be accessed from the bottom of the garden. It also has its own parking space.

The house is situated in a popular location, close to schools and local amenities, making it an excellent choice with a layout that is user-friendly and designed to maximise space.

This property presents a wonderful opportunity for those looking to settle and live within a modern development in Bourne and is within short walking distance to local amenities, schools and Bourne town centre.

This property is sure to meet your needs, with its appealing features and popular location. Viewings are highly recommended.

Management Charge is approximately £240.16 pa

3 Bedrooms 2 Bathroom 1 Reception

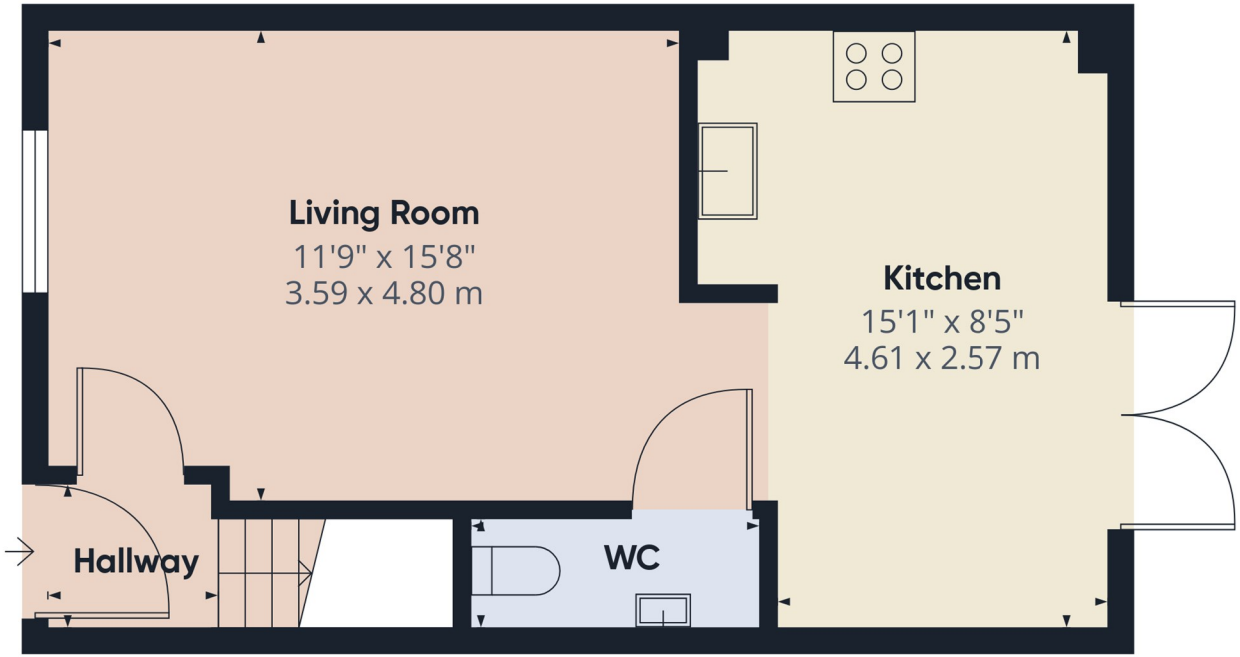

Floor 0 Building 1

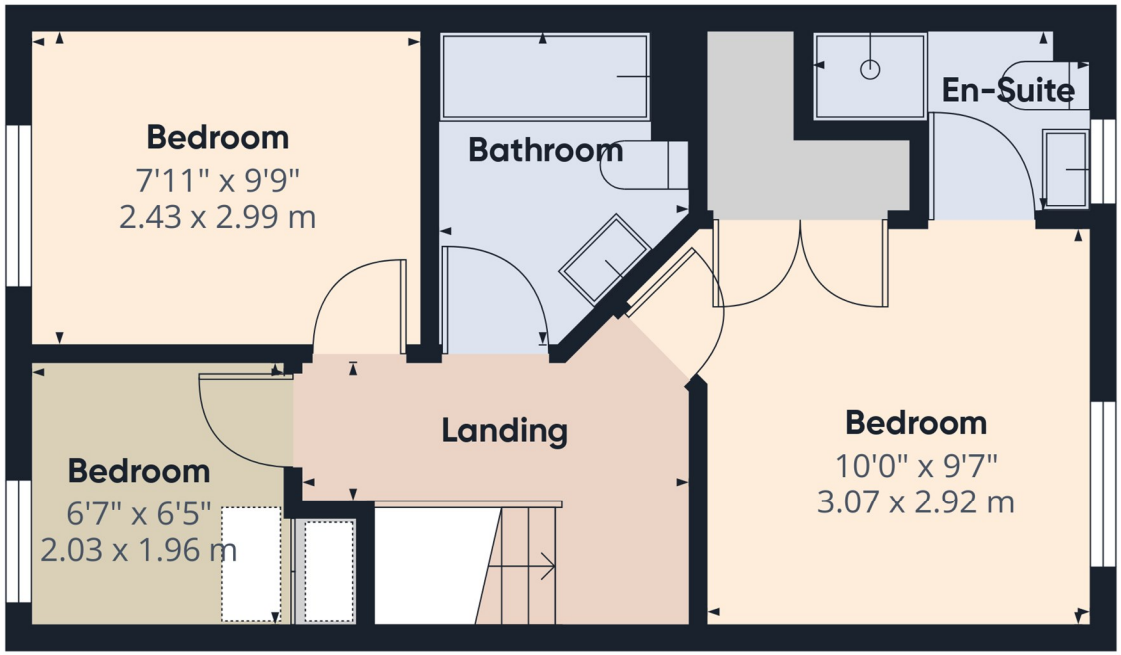

Floor 1 Building 1

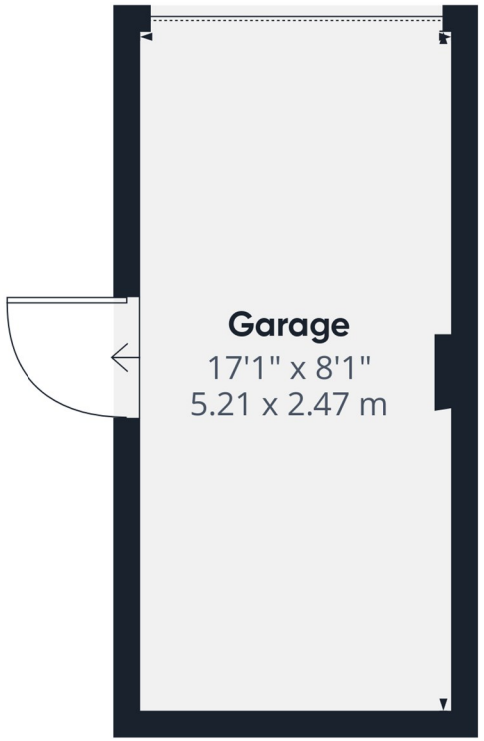

Floor 0 Building 2

Approximate total area(1)

884 ft²

82 m²

(1) Excluding balconies and terraces

Calculations reference the RICS IPMS 3C standard. Measurements are approximate and not to scale. This floor plan is intended for illustration only.

GIRAFFE360

27

SERVICES & UTILITIES

Tenure: Freehold **Council Tax Band:** B

For the **MATERIAL INFORMATION REPORT** on this property select the link - 30782789

Or alternatively speak to your Rosedale agent who will be able to help you.

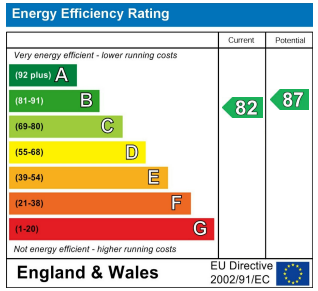

Interested in viewing this property?

01778 420011

12 North Street, Bourne, Lincolnshire, PE10 9AB

IMPORTANT INFORMATION

Anti-Money Laundering Checks: In accordance with the Money Laundering Regulations, all purchasers are required to complete identity and anti-money laundering (AML) checks. Rosedale Property Agents will undertake these checks and a charge of £50 including VAT per person will apply to every purchaser named in the transaction. This charge is non-refundable once the checks have been initiated.

Property Particulars: These particulars are intended as a general guide only and do not constitute, nor form part of, an offer or contract. All descriptions, dimensions, measurements and areas are approximate and prospective purchasers should satisfy themselves as to their accuracy.

Floorplans & Measurements: Floorplans are provided for guidance only, are not necessarily to scale and should not be relied upon for precise measurements or the positioning of furniture, appliances or fittings. All dimensions and floor areas are approximate.

Photographs: Photographs are provided for illustrative purposes. Images may have been digitally enhanced, including adjustments to brightness, exposure, colour and contrast; however, such enhancement is not intended to materially alter the appearance, features or condition of the property.

Services & Appliances: Unless otherwise stated, Rosedale Property Agents has not tested any services, appliances, equipment, heating systems or installations referred to within these particulars. Prospective purchasers should satisfy themselves as to their condition and operation.

Material Information: Rosedale Property Agents will provide known material information relating to the property in accordance with applicable consumer protection legislation. Prospective purchasers should review all available information, make appropriate enquiries and obtain independent legal and professional advice before entering into a commitment to purchase.

Rosedale

rosedalepropertyagents.com